Acme Sanitary Ware Co. Ltd.
1/F, Acme Building, 22-28 Nanking Street, Kowloon, Hong Kong
Tel: 2388 7171 Fax: 2710 8012
Email: acme@acmesanitary.com.hk
Website: www.acmesanitary.com.hk
Since 1949

GROHE Pure Freude an Wasser

PROJECT		REF		REV	ITEM CODE	
LOCATION		DATE			PAGE	

SANITARY WARE SPECIFICATION SHEET

Item Descriptions	GROHE (Germany) "Eurosmart" Chrome plated single lever basin mixer 1/2" M-size; nominated flow rate **5 L/min** in WELS **Grade 1**; Registration No. TM 17-0116
Dimensions	L110 x W48 x H206 mm
Model	23324001
Finish / Material	Chrome Plated
Country of origin	Thailand
Manufacturer	GROHE Limited
Supplier	Acme Sanitary Ware Co. Ltd Mr. Eric Wong/ Mr. Wilson Hung
Contact Tel/Fax	(852) 2388-7171 / (852) 2710-8012
E-mail	acme@acmesanitary.com.hk
Website	www.acmesanitary.com.hk

"Eurosmart"
Basin mixer 1/2〃 M-Size

- monobloc installation
- metal lever
- 28 mm ceramic cartridge with **GROHE SilkMove**
- with temperature limiter
- **GROHE StarLight** chrome finish
- **GROHE EcoJoy** mousseur 5.7 l/min
- **GROHE FastFixation** rapid installation system
- smooth body
- flexible connection hoses



Illustration/ Drawing



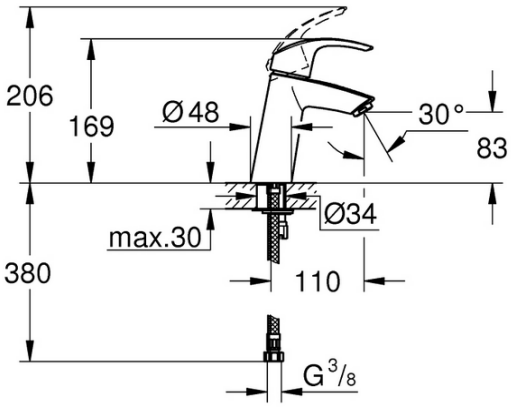

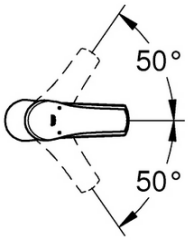

Note: YouTube (Grohe 23324001) https://www.youtube.com/watch?v=r7LrKwYy0v0
YouTube (Unboxing 23324001) https://www.youtube.com/watch?v=xdT83mvcHUY

** All information of the above is for the reference only. No prior notice is made if any changes.*

Acme Sanitary Ware Co. Ltd.
1/F, Acme Building, 22-28 Nanking Street, Kowloon, Hong Kong
Tel: 2388 7171 Fax: 2710 8012
Email: acme@acmesanitary.com.hk
Website: www.acmesanitary.com.hk
Since 1949

GROHE Pure Freude an Wasser

PROJECT		REF		REV	ITEM CODE	
LOCATION		DATE			PAGE	

SANITARY WARE SPECIFICATION SHEET

GROHE EUROSMART

GROHE'S NUMBER 1 IN PREMIUM PERFORMANCE

For almost 2 decades, its legendary quality has made the GROHE's Eurosmart range the obvious choice for planners, architects and plumbers. Making it the number 1 worldwide with over 30 million sold. With its wide range of designs and functionalities, its long-lasting GROHE SilkMove Technology and German engineering know-how, Eurosmart is valued for every kind of project – bath, kitchen, commercial, large-scale or small. Eurosmart: always a first class choice since 1999.





GROHE SilkMove cartridge technology for smooth handling

This premium tap comes with a continuously variable water temperature and volume adjustment technology, ensuring effortless lever operation even after years of use.



Easy to clean thanks to the GROHE StarLight chrome coating

Just wipe the tap down with a dry cloth – the ultra smooth surface finish is scratch resistant and ensures a lasting luminous sheen. You'll save plenty of time cleaning while your tap always looks shiny and new.



GROHE EcoJoy with water-saving function for reduced consumption

GROHE EcoJoy reduces water consumption by up to 50% without compromising on performance. Whenever you turn on your tap, you will enjoy a full jet of water while saving money nonetheless.





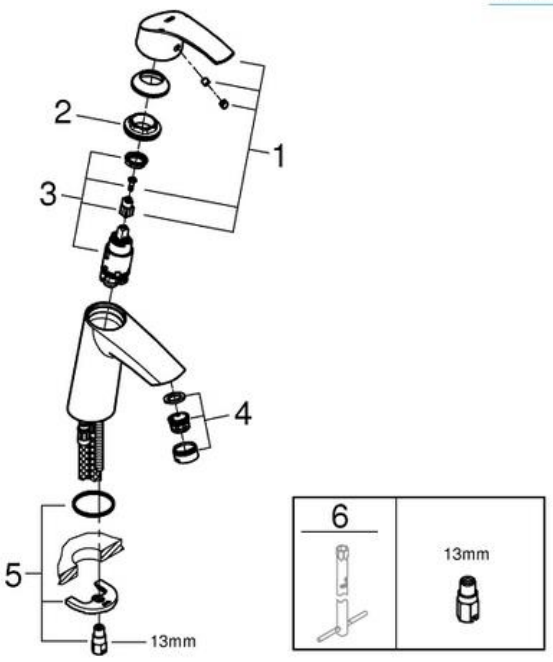

Pos.-nr.	Prod. description	Order-nr.
1	Lever	46859000
2	Fitting ring	46715000
3	Cartridge	46580000
4	Mousseur	48159000
5	Shank fastening assembly	46249000
6	Mounting wrench	19017000*

* Optional accessories

Note:

** All information of the above is for the reference only. No prior notice is made if any changes.*

註冊號碼 (Registration No.) : TM 17-0116

自願參與用水效益標籤計劃 - 水龍頭
Voluntary Water Efficiency Labelling Scheme - Water Taps

Certificate of Registration 註冊證書

ACME SANITARY WARE CO., LTD. 2388 7171



茲證明
This is to certify that

將下列水龍頭在本計劃內註冊：
has registered the following water tap under this scheme :

牌 子 / Brand	:	GROHE
型 號 / Model	:	23324001
種 類 / Type	:	Mixing
原產地 / Country or Region Origin	:	Thailand

在用水效益標籤上展示的標誌 *Symbolic Presentation on the Water Efficiency Label*	:	💧	滴水點 *Water droplet(s)*
用水效益級別 *Water Efficiency Grade*	:	1	
耗水量 *Water Consumption*	:	5	公升/分鐘 *litres/minute*

簽發日期 : 11 August 2017
Date of Issue :

水務署
Water Supplies Department

周世威

水務署署長(周世威代行)
for Director of Water Supplies

水 務 署
Water Supplies Department

總部 Headquarters
香港灣仔告士打道七號入境事務大樓 48 樓
48/F, Immigration Tower, 7 Gloucester Road, Wan Chai, Hong Kong

本署檔號 *Our ref.* 2 O 2024 T/J(889/2024)
來函檔號 *Your ref.*

電話 *Tel.* :
傳真 *Fax.* : 2824 0578

25 September 2024



Approval of "GROHE" Basin Mixer
(General Acceptance No. C20240660)

Your E-Application [file-id: ETJ-GA-20240901-275] dated 3 September 2024 refers.

Having considered the test report ref. J30052A issued on 22 August 2024 by Nutek Systems (HK) Ltd., this Authority accepts that the fitting described below complies with, and its use when correctly installed does not contravene, the Waterworks Ordinance and Regulations.

Name of Manufacturer:	Grohe AG
Country of Origin:	Thailand
Brand:	Grohe
Details of Fitting:	3/8" Single lever basin mixer
Model:	23324001
Body Markings:	GROHE
Expiry Date:	11 August 2029

This Authority hereby permits the use of the above fitting in fresh water plumbing systems subject to full adherence to Waterworks installation requirements. In particular, you are required to draw your customers' attention to the following requirement-

> "The cold water supply to the fitting shall be drawn from the same source that supplies the hot water apparatus so as to provide a balanced pressure and to obviate the risk of scalding in the event of a restriction or failure in the water supply."

A condition of this acceptance is that the fitting to be installed shall be replicas of the sample as certified by the testing agent mentioned above and without modifications. This acceptance may be withdrawn at any time if the standard of the fitting installed fails to meet that of the approved sample or if the fitting is found to be unsuitable for use in fresh water plumbing systems.

This acceptance is only applicable to the main body of the fitting, unless otherwise specified.

For the use of the fitting in any project, the General Acceptance Number of this letter must be quoted as a means of identification of acceptance of the fitting by this Authority.

Should you have any enquiries, please contact our Engineer Mr Albert CHOW at tel. no. 3583 4086.

Yours faithfully,

(Terry KUNG)
for Director of Water Supplies

Encl.

c.c. WSD 3321/1/82] - without catalogue
ME/MC] - with soft copy only